Burnerlance 24-HF-N-"L"-"d" Welded

24-XQ01-4G-E

24-11-23

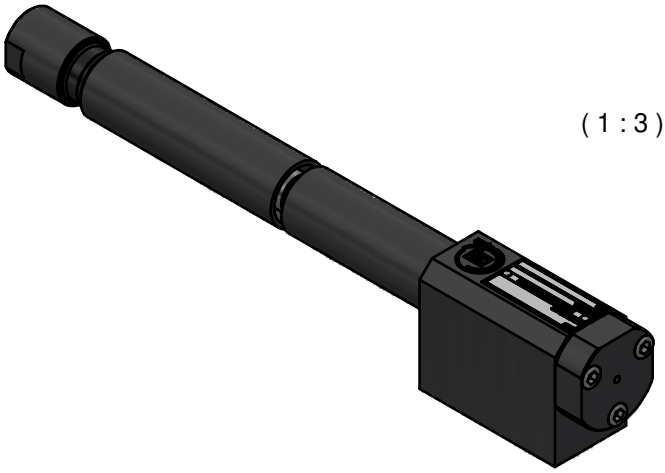

(1 : 3)

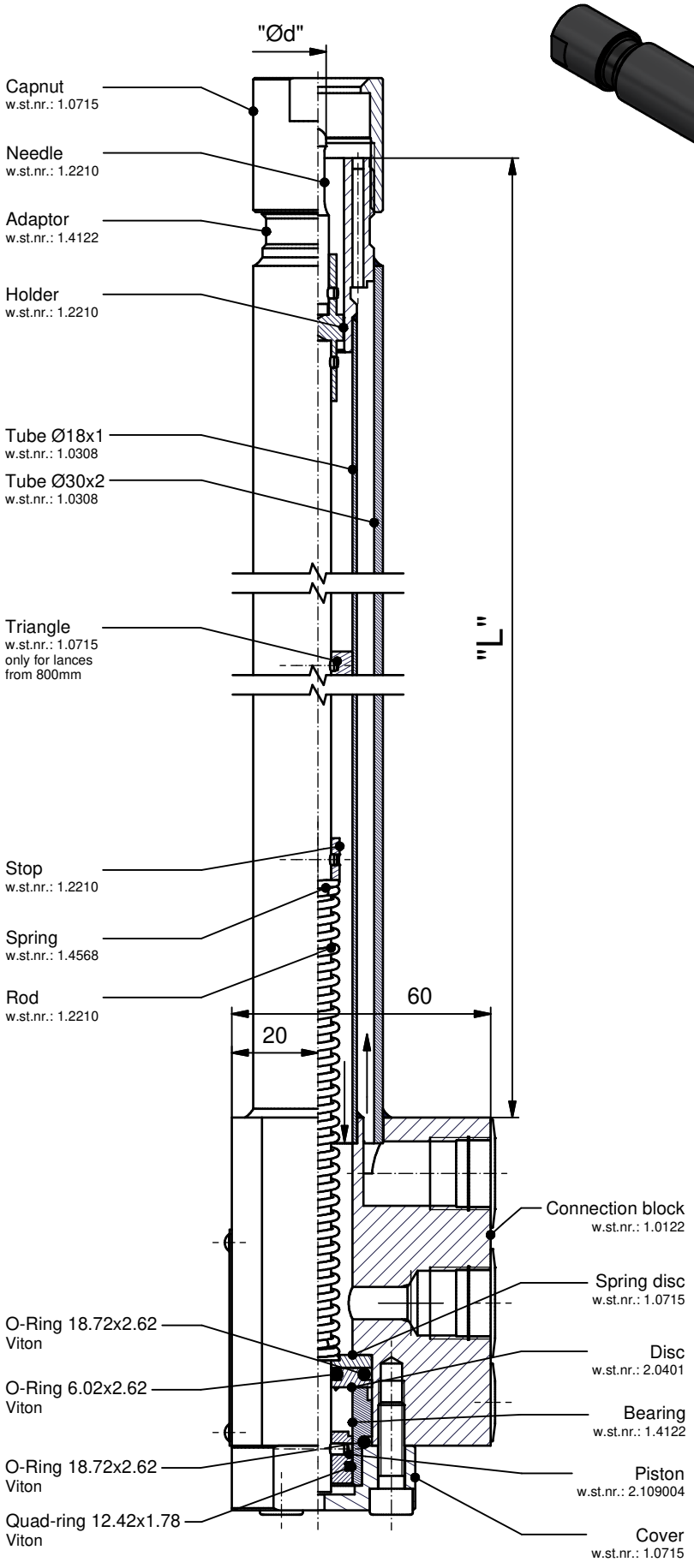

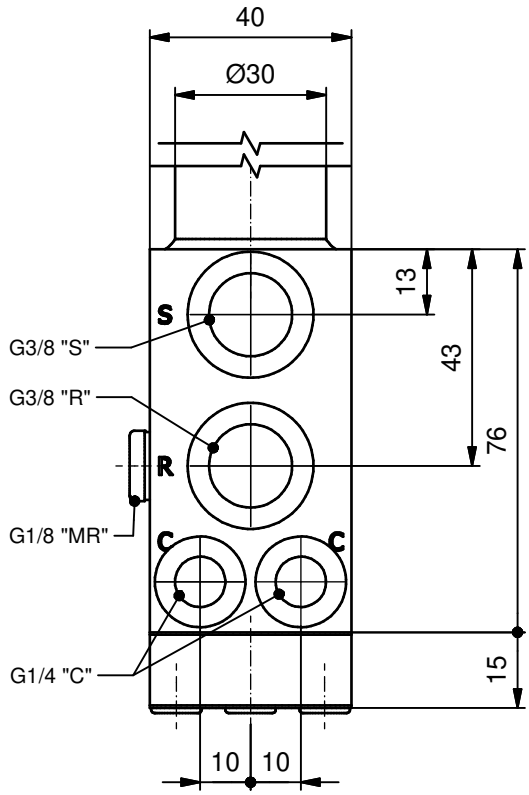

© *Fluidics Instruments BV*