Brennerlanze 24-SKSM-"L"-14301 Welded

24-Z406-4P-D

12-11-18

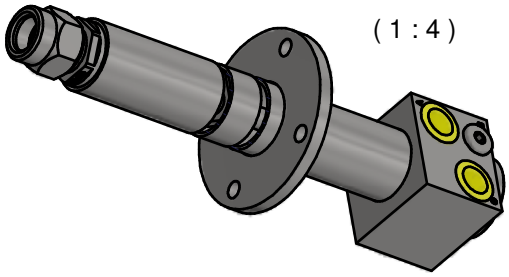

(1 : 4)

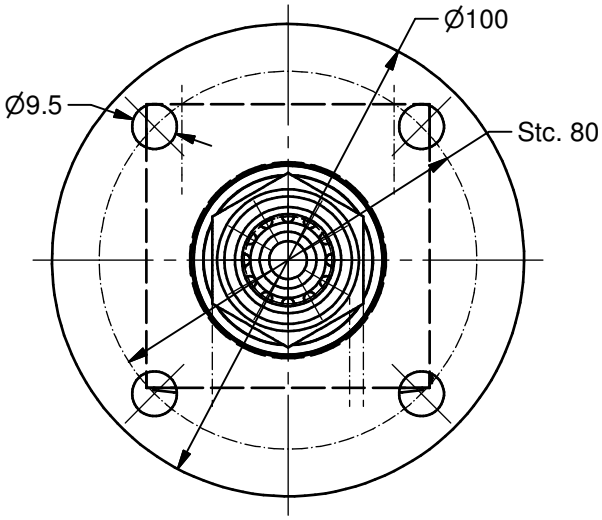

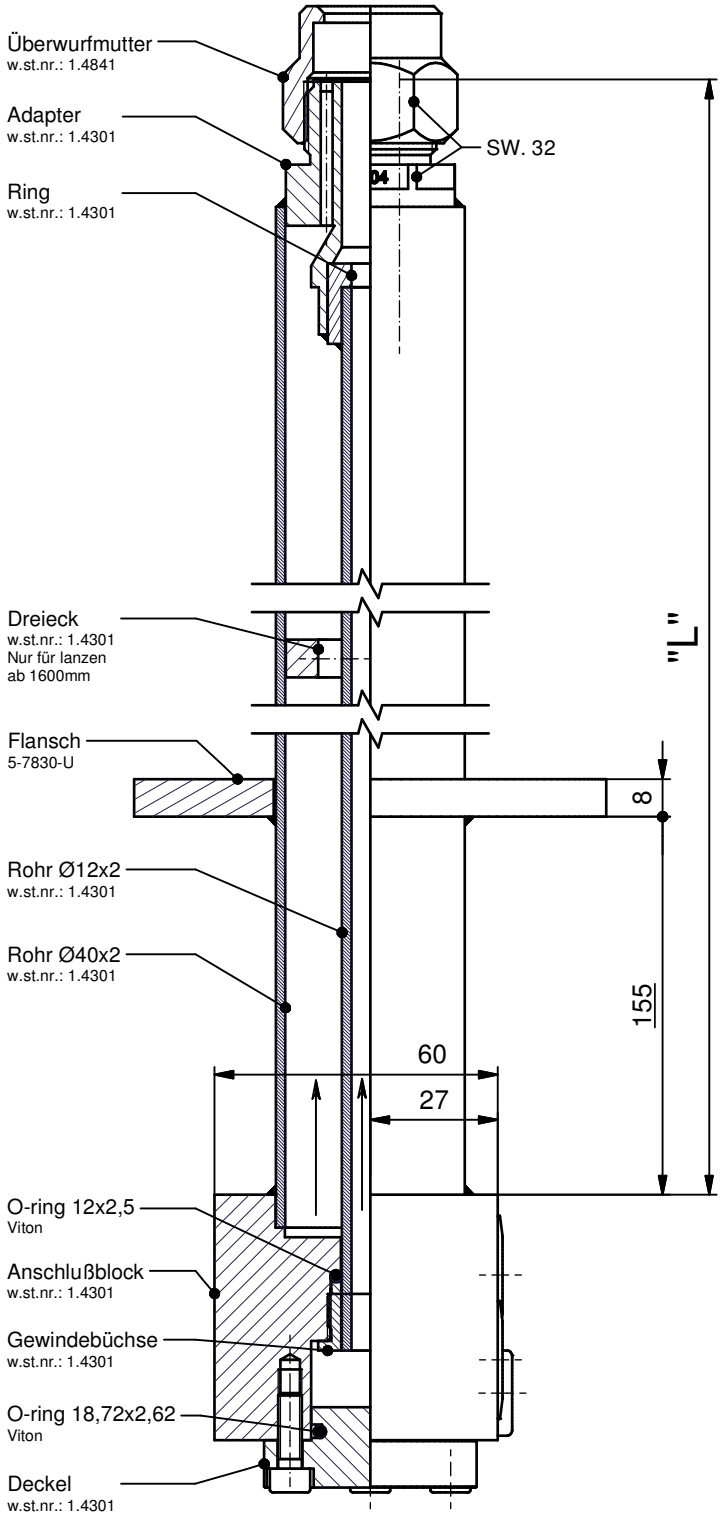

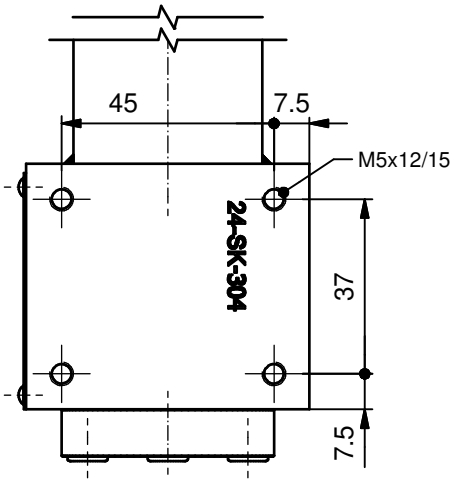

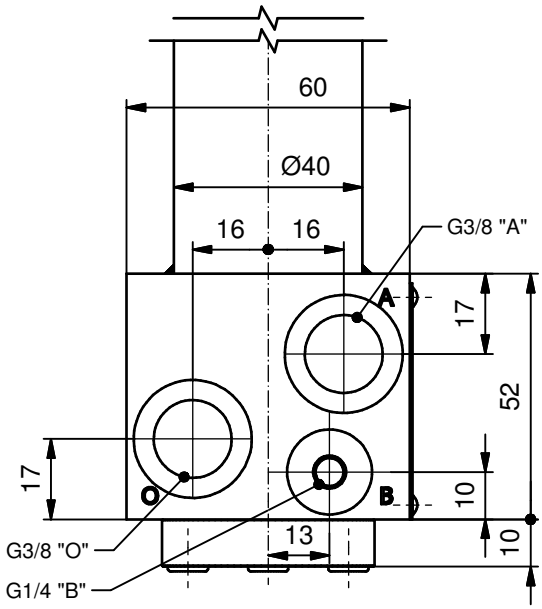

© *Fluidics Instruments BV*