Brennerlanze 24-HF-N-"L"-"d" Welded

24-XQ01-4G-D

24-11-23

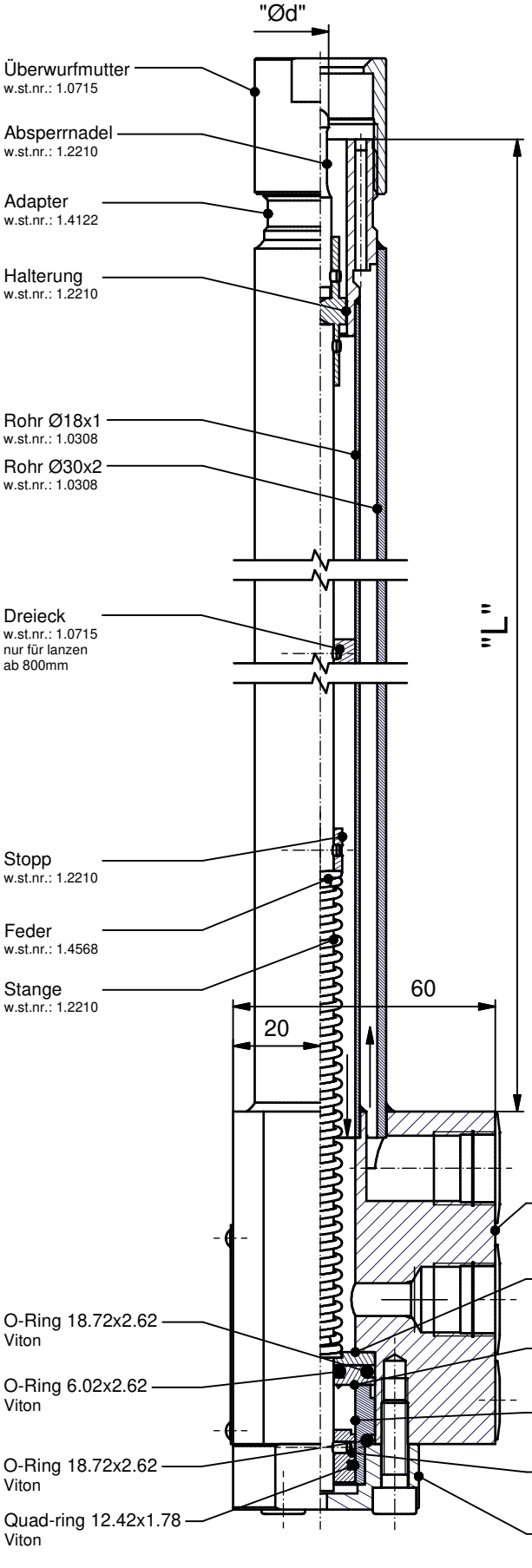

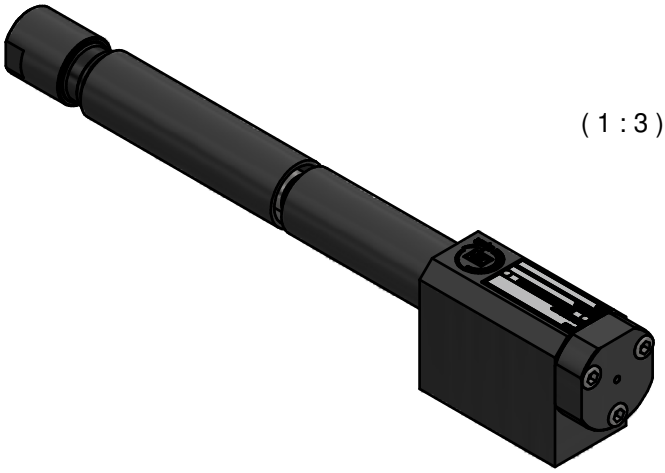

(1 : 3)

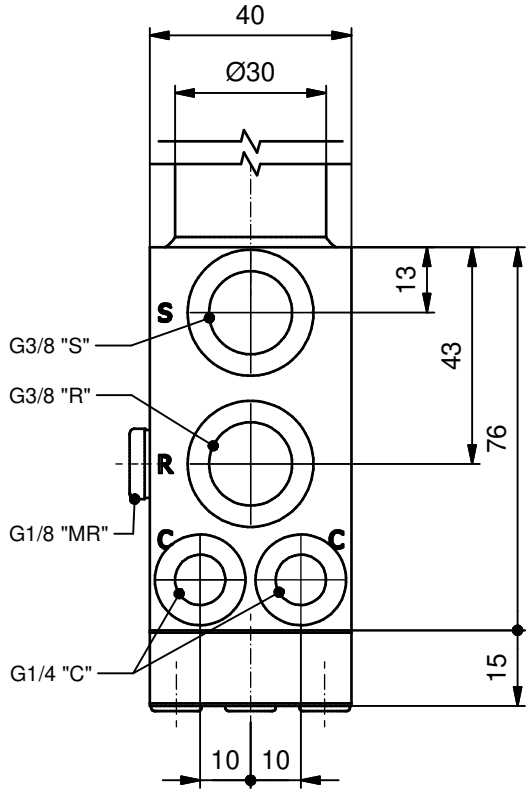

© *Fluidics Instruments BV*